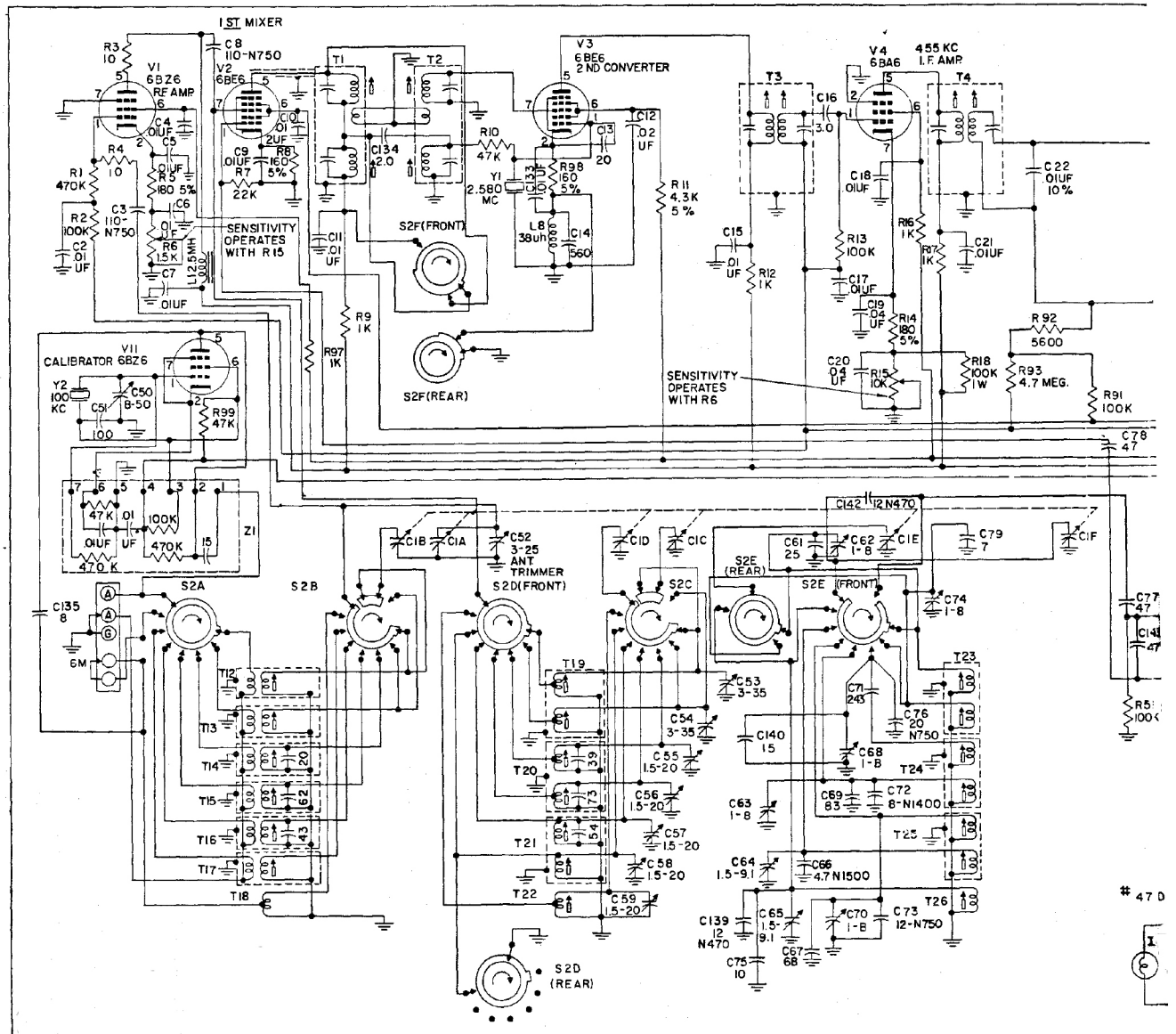
1ST MIXER
V1 6BZ6 RF AMP
V2 6BE6
V3 6BE6 2ND CONVERTER
V4 6BA6 455 KC I.F. AMP
V11 CALIBRATOR 6BZ6
SENSITIVITY OPERATES WITH R15
SENSITIVITY OPERATES WITH R6
S2F(FRONT)
S2F(REAR)
S2A
S2B
S2C
S2D(FRONT)
S2D (REAR)
S2E (REAR)
S2E (FRONT)
C52 3-25 ANT TRIMMER
Y1 2.580 MC
Y2 100 KC
L8 38uh
L12.5 MH
T1
T2
T3
T4
T12
T13
T14
T15
T16
T17
T18
T19
T20
T21
T22
T23
T24
T25
T26
Z1

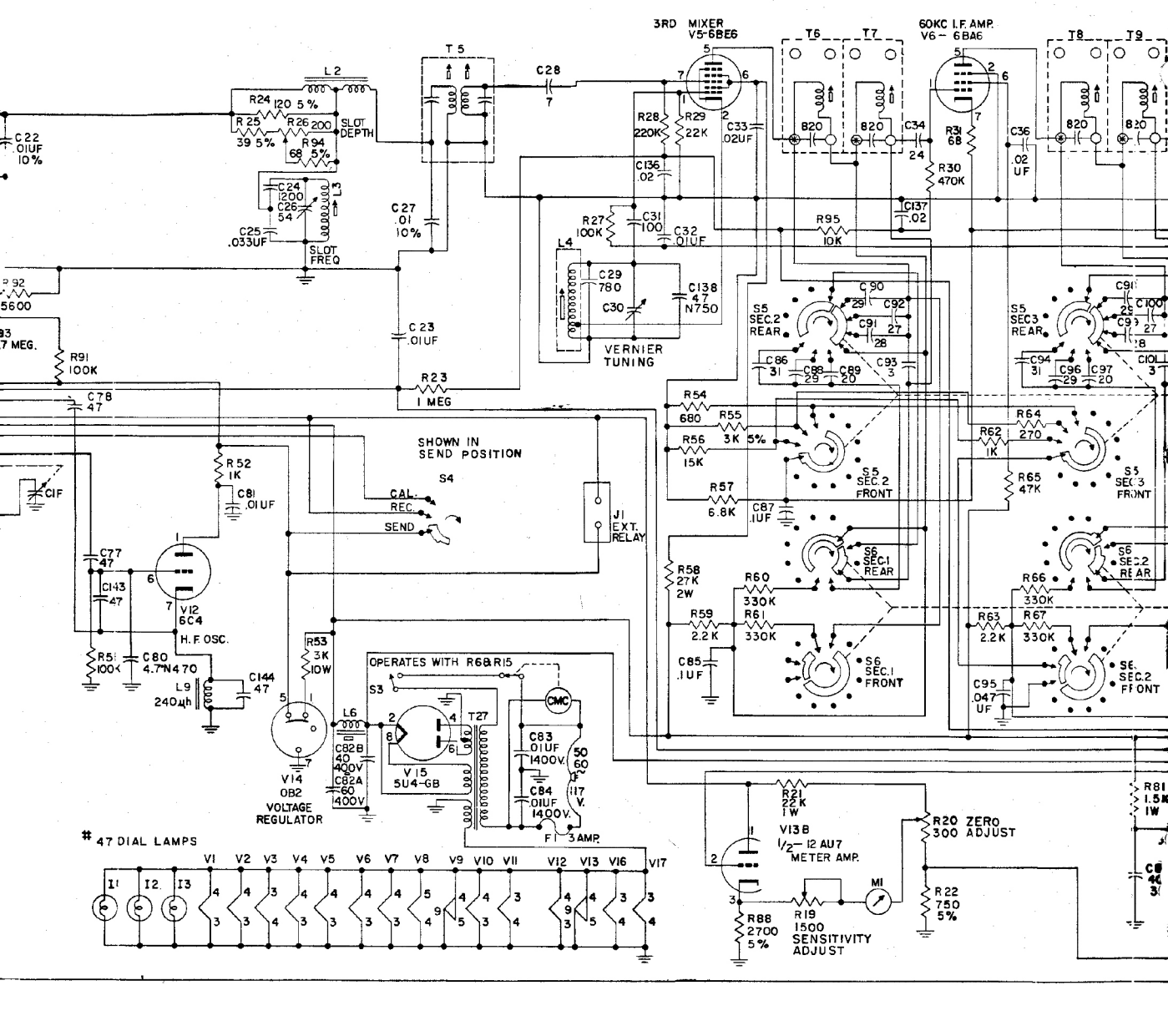

3RD MIXER
V5-6BE6
60KC I.F. AMP.
V6 - 6BA6
T5
T6
T7
T8
T9
L2
L3
L4
R24 120 5%
R25 39 5%
R26 200
R94 68 5%
SLOT DEPTH
C24 1200
C26 54
C25 .033UF
SLOT FREQ
C22 .01UF 10%
C28 7
C27 .01 10%
C23 .01UF
R28 220K
R29 22K
C33 .02UF
C136 .02
R27 100K
C31 100
C32 .01UF
C29 780
C30
C138 47 N750
VERNIER TUNING
R95 10K
C34 24
R31 68
R30 470K
C36 .02 UF
C137 .02
820
R92 5600
R91 100K
C78 47
R23 1 MEG
SHOWN IN SEND POSITION
S4
CAL.
REC.
SEND
J1 EXT. RELAY
R52 1K
C81 .01UF
C1F
C77 47
C143 47
V12 6C4
H.F. OSC.
R51 100K
C80 4.7N470
L9 240μh
C144 47
R53 3K 10W
V14 OB2 VOLTAGE REGULATOR
L6
C82B 40 400V
C82A 60 400V
OPERATES WITH R6&R15
S3
V15 5U4-GB
T27
CMC
C83 .01UF 1400V.
C84 .01UF 1400V.
50 60 117 V.
F1 3AMP.
S5 SEC.2 REAR
S5 SEC.2 FRONT
S6 SEC.1 REAR
S6 SEC.1 FRONT
S5 SEC3 REAR
S5 SEC3 FRONT
S6 SEC.2 REAR
S6 SEC.2 FRONT
R54 680
R55 3K 5%
R56 15K
R57 6.8K
C87 .1UF
R58 27K 2W
R59 2.2K
R60 330K
R61 330K
C85 .1UF
R62 1K
R64 270
R65 47K
R66 330K
R63 2.2K
R67 330K
C95 .047 UF
R81 1.5K 1W
R21 22K 1W
V13B 1/2 - 12 AU7 METER AMP.
R20 300 ZERO ADJUST
R22 750 5%
R19 1500 SENSITIVITY ADJUST
R88 2700 5%
M1
47 DIAL LAMPS
I1 I2 I3
V1 V2 V3 V4 V5 V6 V7 V8 V9 V10 V11 V12 V13 V16 V17

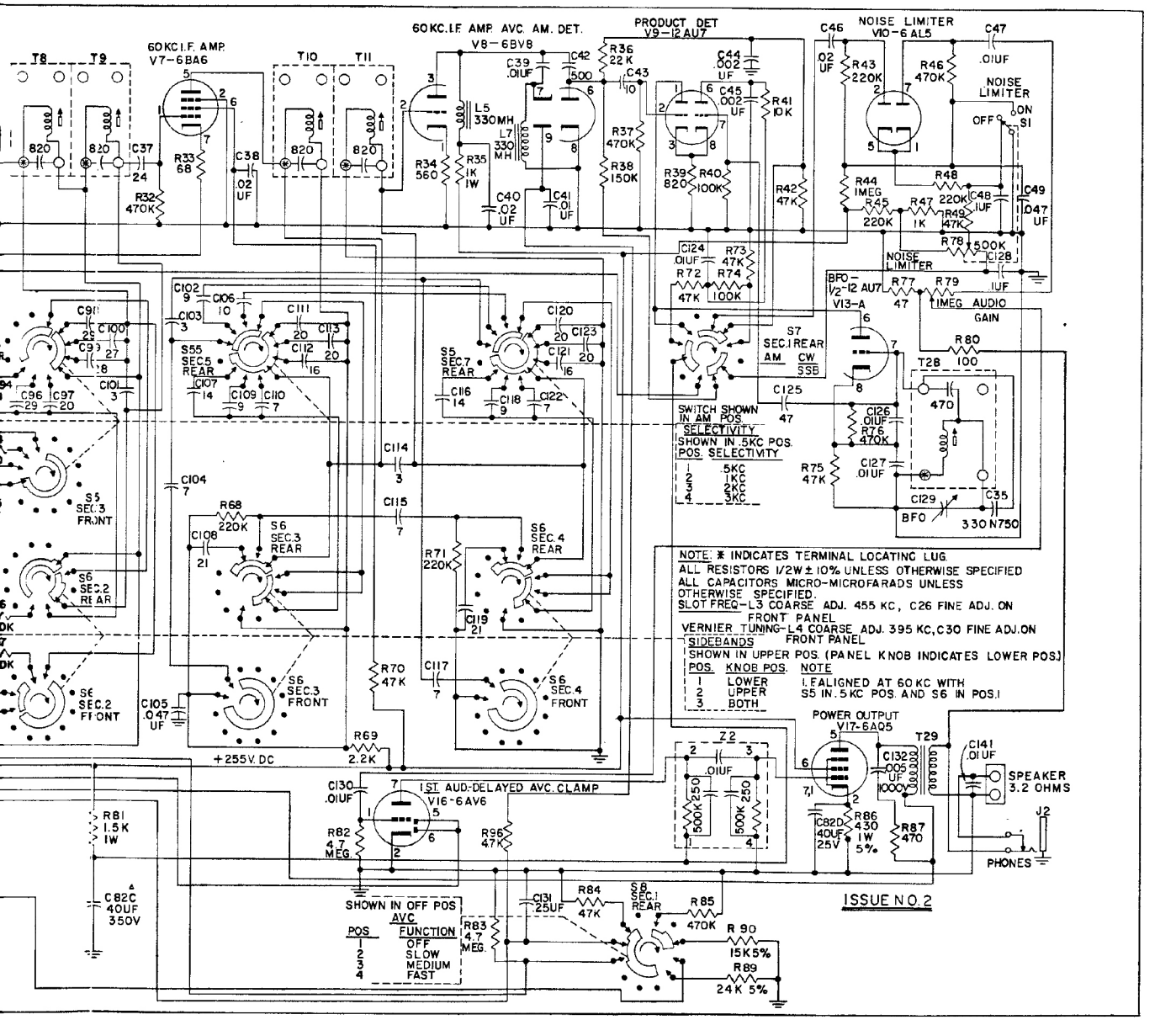

NOTE: * INDICATES TERMINAL LOCATING LUG.
ALL RESISTORS 1/2W ± 10% UNLESS OTHERWISE SPECIFIED
ALL CAPACITORS MICRO-MICROFARADS UNLESS OTHERWISE SPECIFIED.
SLOT FREQ-L3 COARSE ADJ. 455 KC, C26 FINE ADJ. ON FRONT PANEL
VERNIER TUNING-L4 COARSE ADJ. 395 KC, C30 FINE ADJ. ON FRONT PANEL
SIDEBANDS
SHOWN IN UPPER POS. (PANEL KNOB INDICATES LOWER POS.)

POS.	KNOB POS.	NOTE
1	LOWER	I. FALIGNED AT 60 KC WITH
2	UPPER	S5 IN .5 KC POS. AND S6 IN POS. 1
3	BOTH	